atlantic

VERTIGO
electric water heater

Enamelled steel tank

DOCUMENTATION FOR INSTALLATION AND OPERATION

Important:
For horizontal installation only
The Hot & Cold water outlet must be at the side

INDOOR INSTALLATION ONLY

25 Litre Model
40 Litre Model
65 Litre Model
80 Litre Model

EAC

9954 – 1049 NZ

Model	Max Power output (W)/(Вт)	Voltage (V~)/(В)	Water Connections	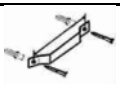		
Model 30 (25L)	1000	230	½″	p. 2/3	p. 4	p. 5
Model 50 (40L)	2250	230	½″	p. 2/3	p. 4	p. 5
Model 80 (65L)	2250	230	½″	p. 2/3	p. 4	p. 5
Model 100 (80L)	2250	230	½″	p. 2/3	p. 4	p. 5

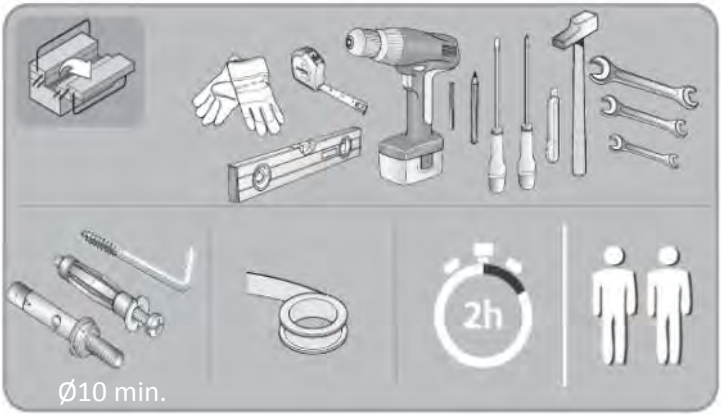

1.2

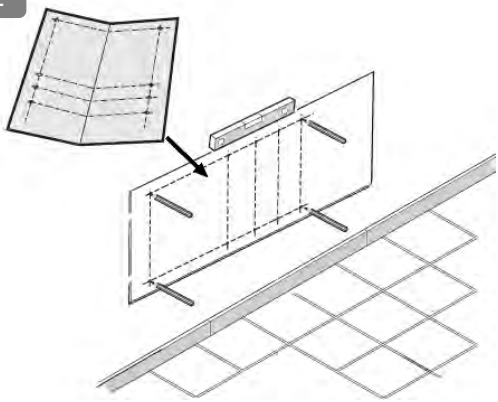

1.3

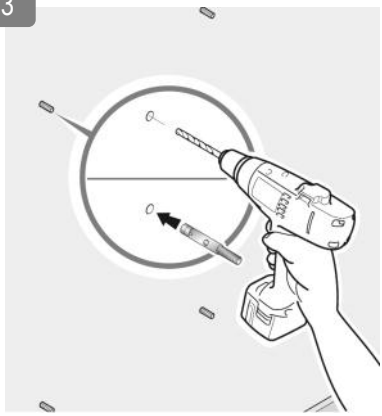

1.4

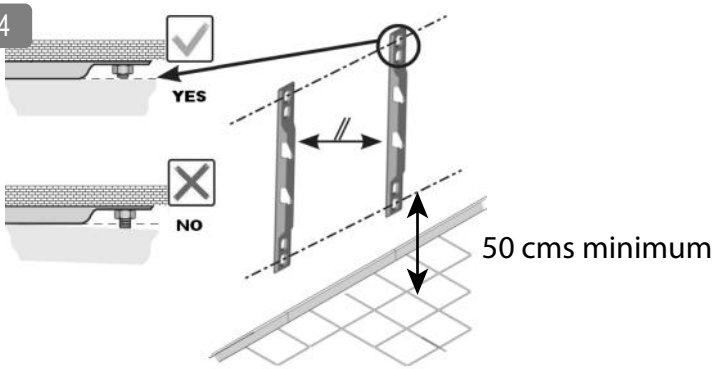

1.5

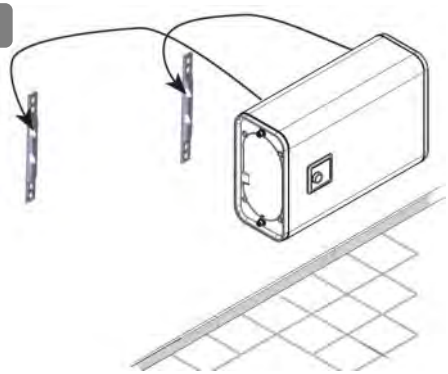

2 Hydraulic connection

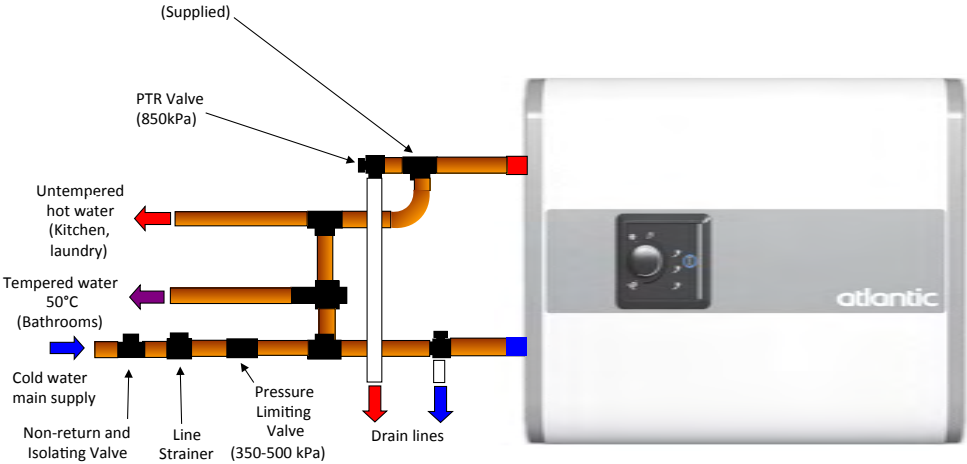

Warning

This device is not intended for use by persons (including children) with physical, sensory or mental disability, or by persons lacking experience or knowledge, unless they have received from a person in charge of their safety adequate supervision or preliminary instructions on how to use the device. Care must be at all times to keep children from playing with the device.

Caution

Heavy item, handle with care

- Install the appliance in a room that is protected from frost. If the appliance is damaged because the PTR valve safety device has been blocked, it is not covered by warranty.
- If the appliance is to be fitted in a room or location where the ambient temperature is higher than 35°C, sufficient ventilation must be provided.
- It is compulsory to fit a tray/ sump below the water heater if mounted in a suspended ceiling, under a roof or above living area. Position the appliance where it can be accessed.
- Make sure that the wall on which the appliance is mounted can support the weight of the appliance when filled with water.
- This device is intended for use at a maximum altitude of 3000 m.
- Ensure that the wall on which the appliance is mounted can support the weight of the appliance.
- When installed in a bathroom do not install in volume V1 or V2

Mandatory installation of a safety device in a frost free location (or any other new device which limits the tank pressure) to 850 kPa according to the nominal pressure, with a size of 3/4" on the input of the water heater, respecting the local regulations .

Operate regularly the discharge of safety device to prevent scaling and check that it is not blocked.

To drain the device switch off the power and the supply of cold water, open the hot water faucets and manipulate the safety valve.

The pipes used must support 1 MPa (10 bar) and 100°C.

Cold Water Inlet

Cold water piping should be provided with a 350 – 500 kPa Pressure Limiting Valve at the point of cold water connection to the water heater. In addition to the Pressure Limiting Valve, it is a requirement of AS 3500.4 & NZBC G12 that both a Stop Valve and a Non Return Valve are installed upstream of the Product.

No parts (stop valve, pressure reducer, etc.) must be placed between the pressure limiting valve and the cold water inlet of the water heater, apart from a copper pipe.

Note: Since limited water discharge from Pressure Limiting Valve is normal in the heating operation, the discharge pipe needs be connected to external drain.

Hot Water Outlet

Where a maximum hot water delivery temperature is specified by local, state or federal regulations, a tempering valve shall be installed at the hot water outlet, as required.

The included specified Pressure & Temperature Relief valve must be installed as shown in the schematic. The PTR valve should be connected to a drain point to accommodate discharge as a result of both water expansion during heating and also pressure fluctuations.

The supplied PTR valve must be fitted with Teflon tape - don't use paste or hemp.

DN15 copper drain lines must be connected to the discharge pipe of the PTR valve. The copper drain line must fall away from the ESWH and be installed in a frost- free environment.

The termination point of a drain line must comply with the requirements of AS/NZS 3500.4

WARNING: The Pressure Temperature Relief valve and drain line must not be sealed or blocked.

Electric Connection

All electrical work must be carried out by a registered electrician and in accordance with AS/NZ 3000.

The Atlantic ESWH must be filled with water before connection to a power supply.

Switch off the power before removing the cover to avoid any risk of injury or electric shock.

The installation must be equipped, upstream of the appliance, with a bipolar cut-out device (fuse, breaker switch) respecting local regulations (30 mA earth-leakage breaker).

Always connect the earth conductor of the cable to the earth ground wire or connect the earth conductor to the appropriate terminal identified by the symbol.

Thermal cut-out

All Atlantic ESWH are equipped with a thermal cut-out with manual resetting which shuts off the power to the water heater if it becomes overheated.
If the circuit breaker keeps tripping,
a) Switch off the power before taking any further action,
b) Remove the cover,
c) Check the electrical connections,

If the cut-out continues to trip, replace the thermostat. Never by-pass the safety device or the thermostat. Connect the power supply only via the terminal.

The thermal cut-out fitted to the auxiliary electric heating element must be replaced by an authorized agent. Failure to respect this clause invalidates the warranty.

DANGER: The operation of the thermal cut-out indicates a possibly dangerous situation. Do not reset the thermal cut-out until the water heater has been serviced by a qualified person.

3

FLAT 30

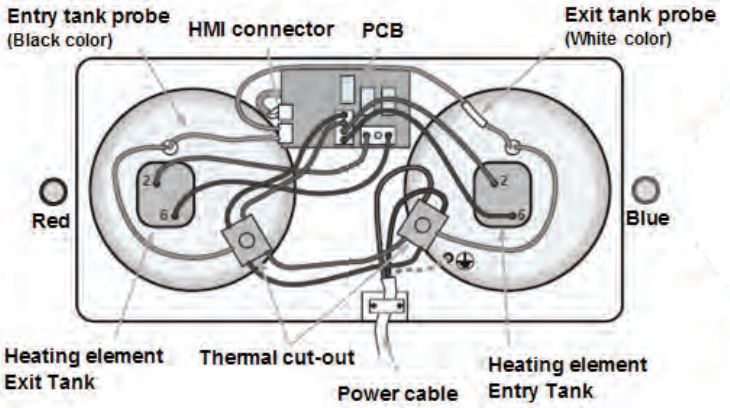

FLAT 50, 80, 100

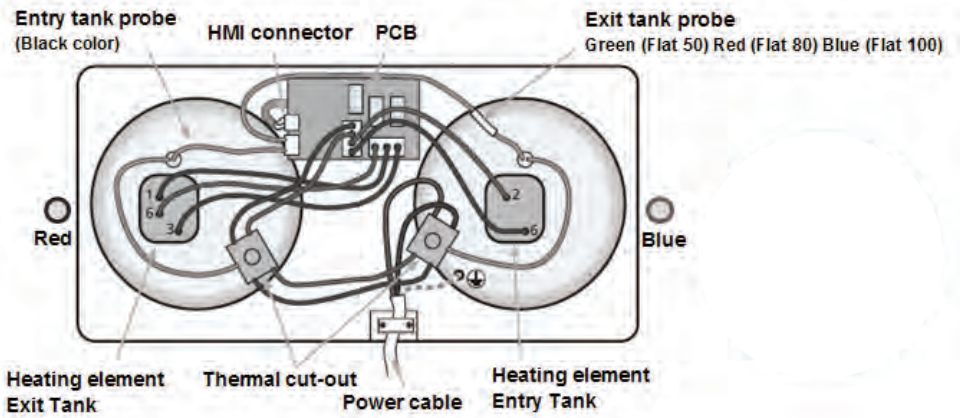

- **NEVER POWER THE WATER HEATER WITHOUT WATER:** Models with an electric heating element will be certainly damaged.
- Fill the tank completely. Before powering up, open the hot water taps, drain the pipes in order to empty the air.
- Check the tightness of the tubes and of the flange seal under the plastic cover. In case of leaking tighten moderately. Check the operating of the hydraulic components and of the safety valve.
- Turn the power on. After 15 to 30 minutes, depending of the capacity of the device, the water should drip from the drain. This is normal and due to the expansion of water. Check connection leaks and seal. During heating and according to the water quality, hot water tanks can make a bubbling noise. This noise is normal and does not indicate any defect of the unit.

The water heater features a digital screen that allows choosing the running mode (see. drawing section 4 page 10).

1/ **Mode selection knob** (Ref. A): Enables to choose the running mode.

2/ **Operating modes**:

FROST FREE Mode Ref. B): Automatic regulation at frost-free temperature (7°C), in order to reduce the electric consumption during the periods of absence of the user.

MANUAL Mode (Ref. C): User selects a hot water temperature up to 70°)).
Warning: this operating mode may increase the electrical consumption of the product.*

SMART Mod (Ref. D): Fully automatic operation of the water heater: after a learning period, the product will adjust automatically the hot water temperature adapted to the user consumption. This allows lowering of the electrical consumption.

BOOST Mode (Ref. E): Soft touch button to activate fast heating of the appliance. The BOOST mode is automatically deactivated when full hot water is available.
Warning: no BOOST on FLAT 30

3/ **Shower display** (Ref. F):
Display of the quantity of hot water available. When a shower symbol is blinking, this means that a shower is under production (heating in progress).

4/ **Power indicator** (Ref. G): This light appears when the water- heater is connected to power supply.

TROUBLESHOOTING

When a malfunction occurs, the user interface of the appliance can display an error code.

	Meaning	Remark
2 successive flashes of one shower sign, 3 sec. of pause, 2 successive flashes ... 	**Error 3 :** Probe fault	Change probe
2 successive flashes of 2 shower signs, 3 sec. of pause, 2 successive flashes ... 	**Error 3 :** Probe fault (Differentiation)	
4 successive flashes of one shower sign, 3 sec. of pause, 4 successive flashes ... 	**Error 9:** Relay or PCB fault	Change PCB

4

Flushing of sediment and draining

To flush or to drain the water heater, power must be turned off and then turn off the cold water supply to the water heater. The lever on the pressure and temperature relief valve should be opened but care should be taken so the lever does not snap back as it could damage the valve seat. The pressure in the water heater will be released when the lever is opened. The union at the cold water inlet to the water heater should be undone and a hose should be attached to the water heater side of the union. The other end of the hose should go to a drain.

Opening the pressure and temperature relief valve allows air into the water heater and for the water to drain. Following complete draining of the water heater, the closest hot water taps may be opened fully and the pressure and temperature relief valve closed with care. Following reconnection at the cold water inlet, the cold water stop valve is now opened fully and the water heater may be filled with cold water and flushed through to ensure the cylinder contains no sediment and is clean. Finally the closest hot taps are closed and power may be turned on again to the completely filled water heater.

In the event of an anomaly - the heater does not heat or steam is released from the Pressure Temperature Relief valve - switch off the electric power supply and contact your reseller.

Domestic maintenance

Water heaters do not require much domestic maintenance by the user. Operate the Pressure Temperature Relief valve once a month to eliminate any residue of scaling and check that it is not blocked. Open and close the PTR valve slowly to avoid damage to the seal.

DANGER: Failure to operate the Pressure Temperature Relief valve at least once every six months may mask a problem with the water heater. Continuous leakage of water from the Pressure Temperature Relief valve may indicate a problem with the water heater.

It is not unusual for the Pressure Temperature Relief valve to allow a small quantity of water to escape during the heating cycle and this must be left open to the atmosphere.

Installation

In accordance with AS/NZS 60335.2.21 the water heaters must be fixed to the ground using the attachment provided and in compliance with the New Zealand Building Code Clause G12, Seismic restraint of storage water heaters.

Installation must also comply to AS/NZS 3500.4.2 and all local codes.

The clearance required needs to be adequate for service/replacement of cold water inlet piping devices, PTR valve and tempering valves (where fitted), elements and thermostats. This may be facilitated by correct orientation of the cover positions when installing. There are no operational clearance limitations to surrounding structure. PTR valve removal requires approximately 150 mm for withdrawal.

Combustible Material

It is recommended to not place combustible material on or adjacent to the water heater.

Hydraulic Connection

Before making the hydraulic connection, it is essential to clean the feed pipes thoroughly to avoid the risk of metal or other particles entering the tank or the water heater.

Cold water piping should be provided with a 350 – 500 kPa Pressure Limiting Valve at the point of cold water connection to the water heater. In addition to the Pressure Limiting Valve, it is a requirement of AS 3500.4 & NZBC G12 that both a Stop Valve and a Non Return Valve are installed upstream of the Product.

No parts (stop valve, pressure reducer, etc.) must be placed between the pressure limiting valve and the cold water inlet of the water heater, apart from a copper pipe.

Note: since limited water discharge from pressure limiting valve is normal in the heating operation, the discharge pipe needs be connected to external drain.

Commissioning

Never switch the water heater on without it being filled with water.
Before switching on, open the hot water taps, bleed the pipes until no air is present and fill the appliance.

Check that the pipes and the door seal under the cover are not leaking. If there are any leaks tighten gently. Check that the water safety devices are working and fill the appliance. Switch on the appliance. After 5 to 20 minutes according to the capacity of the appliance, water should start dripping from the drain outlet. This is normal and results from the expansion of the water.

Check that joints and seals are watertight. In the course of heating up, shielded water heaters may make a boiling noise; this is normal and does not indicate any fault with the appliance.

User Maintenance

Operates once a month the PTR valve to prevent scaling and verify that it is not blocked. If this is not done, damage may be caused and the guarantee invalidated.

Maintenance by a qualified person

Remove the scale sludge. Do not scrape or chip at lime scale deposited on the casing because this may damage the lining

Change the magnesium anode every 2 years or when its diameter is less than 10 mm. Changing the heating element or the anode requires the water heater to be drained and the seal changed.

Draining the tank

Turn off the power and the supply of cold water, open the hot water faucets and manipulate the safety valve before performing these operations. Refit the heating element and tighten the screws gently (opposite screws in sequence), check for leaks the next day and tighten if required.

If the supply cord is damaged, it must be replaced by a special cord or assembly available from the manufacturer or approved service agent.

Replaceable parts

Replaceable parts are the thermostat, seals, heating element, boiler shell, indicator light, magnesium anode and connection cable. The guarantee requires genuine manufacturer's parts to be used.

Warranty Conditions

The following faults are excluded from this warranty:

1) The Atlantic ESWH must be installed to plumbing and electrical services that meet all relevant statutory and local requirements of the region in which the system is installed. Relevant clauses of AS/NZS 3500 Plumbing & Drainage Code; and NZ G12 New Zealand Building Code – must be complied with by the Installer.

2) The Atlantic ESWH requires a single phase 16 amp supply requiring a licensed electrician for connecting. A licensed plumber must connect cold water and hot water supplies in accordance with this manual. The installers must comply with good practice, applicable installation standards and Atlantic Australasia's technical instructions included in this Manual.

3) The ESWH must be regularly operated and maintained in accordance with the service & maintenance in accordance with this manual. Supporting evidence by a service agents report or receipt invoice detailing maintenance history would be required with any claims under this warranty. Should this ESWH be installed in a regional location where regular flushing is required due to sediment build-up, then a drain cock or tee for flushing must be fitted at the time of installation. If in doubt consult your Installation contractor.

4) The cylinder is warranted to be defect free for a period of 5 years in domestic installations, and 2 years in commercial installations. Electric elements and component parts are warranted for a period of 2 year in domestic installations and commercial installations. There is a 2 year warranty on tank labour in domestic installations and 1 year in commercial installations. All parts and labour are covered for 1 year.

5) Our warranty takes effect from the date of purchase (according to invoice), and where there is no documentary evidence, the date used will be that of manufacture as shown on the water heater information plate, plus six months. The warranty on the replacement part or water heater (under warranty) ends at the same time

as the part or water heater is replaced. Internet registration must be completed for warranty protection.

6) This warranty takes the form of repair or determined by Atlantic Australasia Pty Ltd in the form of exchange or supply, free of charge, excluding all labour and transport replacement charges.

7) These Warranty Conditions do not exclude any of the benefits due to the purchaser that may be conferred by Trade Practices and Consumer Law and associated articles in the country of installation.

PLEASE NOTE: If a Service call is requested and it is found that the defect is not a Warranted fault, the purchaser may be charged for associated Warranty/Service call out costs even during the Warranty period.

Faulty maintenance voiding warranty

- Abnormal scaling of heating elements or safety unit PTR valve.
- No maintenance of safety unit PTR valve leading to excess pressure.
- Modification of equipment without notifying the manufacturer.
- Use of spare parts not recommended by manufacturer.

Warranty Exclusions

The following warranty exclusions may cause the Atlantic ESWH warranty to become void. This may also incur a service charge and cost for parts should they be necessary.

1) Any physical damage caused by impacts or falls when the ESWH is handled after leaving the factory.
2) Where service is required to reconnect the ESWH operation due to problems related with abnormal water supply (i.e. high water pressure above 1,000 kPa before, at system pressure relief), faulty plumbing supply or downstream connection and/or electrical wiring or major variations in electrical energy supply.
3) Where an 500 kPa pressure limiting valve as shown in the water circuit diagrams, has not been fitted during installation.
4) Where the ESWH fails due to misuse, accidental damage, acts of God, incorrect installation including being located in premises

affected by frost or bad weather (humid, harsh or badly ventilated atmospheres) or unlicensed service repair work.

5) Any damage resulting from power surge from supply such as accidental high voltage injection or lightning strike.
6) Damage resulting from non-detectable problems due to the inaccessible location of the device, and that could have been avoided by immediately repairing the device if properly located.
7) Claims for damage to walls, foundations (outside), floor coverings & furnishings (inside), roofs or other losses, directly or indirectly due to leakage from the Atlantic ESWH.
8) Where the Atlantic ESWH has been powered up before it has been filled (heating when dry).
9) Where the Atlantic ESWH has suffered external corrosion due to non-watertight piping connections.
10) If the system is either sold and/or repaired or altered by any third party without the consent of Atlantic Australasia Pty Ltd.
11) Does not cover fair wear & tear, particularly from adverse conditions, for example: corrosion and associated levels of condensation in the proximity of the HWS.
12) Exclusions due to Water Composition

Water composition varies widely in New Zealand. It is important that the composition of water is not excessively high in salt which may result in an aggressive attack of calcium carbonate (also known as water hardness). Atlantics warranty is therefore excluded where the water composition is outside these values:

Total dissolved solids	>1000 mg/litre or p.p.m.
Electrical Conductivity	< 500 and > 800 uS/cm.
Total hardness	<150 mg/litre or p.p.m.
Chloride	>250 mg/litre or p.p.m.
Sulphate	>250 mg/litre or p.p.m.
Magnesium	>10 mg/litre or p.p.m.
Sodium	>150 mg/litre or p.p.m.
pH	< 6.5 and > 8.5

Water from springs, bores and dams is also excluded from meeting Warranty conditions because of the rapidly variable composition of these waters due to groundwater salinity and aggressive mineralisation. Water MUST be from a supplied, reticulated source or from rainwater to ensure Warranty compliance.

Warranty

Water Heater Tank – Domestic	5 years
Water Heater Tank – Commercial	2 years
Warranty conditions apply:	
Tank labour – Domestic	2 Years
Tank labour – Commercial	1 Year
Element	2 Years
All Parts and Labour	1 Year

atlantic

FOR INFORMATION, REPAIRS AND SERVICE

NEW ZEALAND: 0800 422 000

For Warranty Registration

Register Online: www.atlantic.nz

email: info@atlantic.nz